Seismic Safety Assessment of Historical Masonry Buildings in Iran; Application to 19th and Early 20th Century Period

Somaye Gholami[1], Farhad Akhoundi* [2], Seyed Jafar Hashemi[3], Paulo Lourenço [4]

1. MA in Strengthening of Historical Buildings, Faculty of Architecture and Urbanism, Tabriz Islamic Art University, Tabriz, Iran
2. Associate Professor, Faculty of Architecture and Urbanism, Tabriz Islamic Art University, Tabriz, Iran
3. Assistant Professor, Department of Civil Engineering, Faculty of Engineering, Arak University, Arak, Iran
4. Professor, Historical Masonry Structures Group, Department of Civil Engineering, University of Minho, Guimarães, Portugal

Abstract
Tabriz is located on a large and active tectonic fault and belongs to a complex system connecting the North Anatolian Fault in Turkey to Alborz in Iran. Today, more than 600 historical buildings have been identified in Tabriz and need to be analyzed and conserved. Due to the lack of guidelines dealing with historical constructions, the evaluation of the seismic safety of those buildings is compromised. Therefore, this study's primary purpose is to evaluate historic buildings' seismic safety using the Italian Guidelines, demonstrating that the approach must be scientific rather than intuitive. Six historic masonry buildings built in the Qajar period were selected as demonstrative case studies. The seismic vulnerability of the buildings was investigated using Level 1 (LV1) and Level 3 (LV3) of the Italian Guidelines on Cultural Heritage. Furthermore, the efficiency and accuracy of the LV1 method in evaluating seismic safety was determined by comparison with the LV3 results. The results show the seismic vulnerability of investigated buildings as a sample of the historic buildings in Tabriz. It is also concluded that LV1 and LV3 methods are not alternatives to each other but belong to two different levels of evaluation, with conservative results for the former.

Keywords: Safety assessment, Historic house, Iran, Italian guidelines, Nonlinear analysis.

1. Introduction

Iran has been subjected to severe and devastating earthquakes throughout history due to its location in the Alpine-Himalayan seismic belt (Biglari, D'Amato, & Formisano, 2021). The 1979 Tabas earthquake, the 1990 Manjil earthquake, the 2003 Bam earthquake, the 2012 Ahar-Varzeqan earthquake, and the 2017 Sarpol-e Zahab earthquake are examples of numerous earthquakes in Iran. The country is an ancient civilization with many historical sites. Tabriz is the fourth largest city in Iran, with a population of about 1.4 million. It is located on a large and active tectonic fault that belongs to a complex system connecting the North Anatolian Fault in Turkey to Alborz in Iran. The Sasanians founded Tabriz in the third century AD, and it was the capital of Azerbaijan for a long time. Moreover, it was the capital of Iran between the fourteenth and sixteenth centuries. The historical seismic records of Tabriz show that this city has experienced several devastating earthquakes so far.

Due to their susceptibility and the size of earthquakes, historic buildings are susceptible to seismic damage. Several scientists have concentrated their study on figuring out how earthquake-prone historic structures and monuments are. These studies focus on rapid, qualitative, and analytical vulnerability assessments based on visual and empirical data. Recently, various studies have been conducted to assess the seismic vulnerability of historic structures and monuments. Hejazi (Hejazi, 2003) examined the old Iranian domes' seismic vulnerability and discovered that they were highly rigid and had high frequencies. According to Lourenço's (Lourenço, 2002) computational study on ancient masonry buildings, it is advised to model structural components rather than entire structures, avoid using full-structure three-dimensional models unless absolutely essential, and do not employ linear elastic calculations. D'Ayala and Ansal (D'Ayala & Ansal, 2012) applied non-linear pushover analysis to study the seismic vulnerability and quantify the risk of a large sample of historic buildings belonging to the Ministry of Cultural Heritage in Istanbul, Turkey. They presented a procedure to evaluate performance points

* Corresponding author. E-mail: f.akhoundi@tabriziau.ac.ir

and to define safety factors based on lateral acceleration, drift or expected damage level. Goded et al. (Goded, Lewis, & Stirling, 2018) established seismic vulnerability scenarios of unreinforced masonry churches in New Zealand. The results aimed to provide a primary tool to identify buildings requiring subsequent in-depth structural analysis.

The seismic safety indicators (lateral load multiplier and safety index) acquired with the study at the territorial scale were validated by the outcomes obtained using a numerical technique, which was based on the research conducted by Torelli et al. (Torelli, D'Ayala, Betti, & Bartoli, 2020) on historic towers. Bigleri et al. (Biglari et al., 2021) applied a technique originally suggested for Italian brick cathedrals to 10 mosques to analyze their susceptibility and danger on a geographical basis quickly. Their findings support the technique, which can also provide a seismic risk score at a territorial level for Iranian old masonry mosques. Zizi et al. (Zizi, Corlito, Lourenço, & De Matteis, 2021) studied the seismic vulnerability of brick churches in the Italian area of Abruzzi, and their findings indicated that the structural reaction of buildings is closely connected to pertinent geometric and typological features. The macro element technique for masonry churches appears acceptable for condensed research since it is a solid instrument for applying to a regional-scale vulnerability assessment to seismic risk. After looking at the primary typological characteristic of the churches in the database, Francesca Ceroni et al. (Ceroni et al., 2022) examined 633 one-nave churches and assessed the most frequent damage and collapse methods. In order to get past the oversimplified description of the general church behavior about the worldwide mean damage index, a detailed examination of their susceptibility was also conducted. They conducted a more thorough analysis of the most vulnerable systems in order to understand better which potential future changes may lessen the seismic risk associated with this particular style of church. Yang Deng et al. (Yang, Yuhang, & Aiqun, 2023) conducted research on the seismic safety evaluation of historical timber structures using updated finite element models. The findings showed that the streamlined simulation technique could successfully and precisely mimic the plastic behaviors of the DG and MTJs.

The Italian Guidelines on Cultural Heritage (DPCM)(DPCM, 2005, 2011) provide a framework for assessing the seismic safety of historical monuments, which have been published to create a framework for structural analysis and strengthening of historical structures, is used in this study. These guidelines introduce a new approach to seismic safety assessment through a multi-level method. DPCM makes the assessment process depending on the objectives and includes three levels of assessment, which are defined as follows:

- Level 1 (LV1): Qualitative analysis and evaluation with simplified mechanical models,
- Level 2 (LV2): Seismic assessment in order to perform local interventions in the building,
- Level 3 (LV3): Global evaluation of seismic response of the building.

Buildings are classified according to their seismic safety at the LV1 level, which assesses them regarding their context. This level is based on a force-based methodology and a simplistic structural model. A small set of mechanical and geometrical parameters for the materials being utilized. Also, qualitative information must be gathered through visual evaluations of the structures. When local interventions in specific areas of a structure are made, the second level of assessment, or LV2, is utilized to evaluate the building's seismic safety. The crucial distinction is that LV2 can only be applied, provided local modifications do not alter the structural behavior of the structure. In order to establish the amount of acceleration that causes the structure to reach various limit states, the third level of analysis, LV3, is based on the global reaction of the structure. An indicator that is derived by comparing the anticipated seismic demand with the seismic capacity is used to assess seismic safety through each level. Correspondingly, simple and precise global models serve as the foundation for LV1 and LV3. Both consider the combined impact of floor diaphragms and structural wall in-plane behavior. However, because of the walls' out-of-plane reaction, LV2 enables the seismic examination of local failure states.

The high seismic hazard in Tabriz justifies the need for seismic evaluation of the historic buildings. In the present study, six historical houses built during the Qajar period (1796-1925) in Tabriz have been selected to discuss the seismic risk, including Behnam, Ganjehizadeh, Nafisi, Ali Monsieur, Sharbat Oghli, and Kalantar. These buildings have been evaluated according to Italian guidelines on cultural heritage (DPCM) (DPCM, 2005, 2011) for the Ultimate Limit State, i.e. earthquakes with a 475-year return period (or 10 percent probability of exceedance in 50 years). The validity of the method provided by LV1 of the Italian guidelines has also been examined.

2. Selected historical houses

Most of the historical houses in Tabriz date back to the Qajar period (1796-1925). The occurrence of a strong earthquake in 1814 destroyed most historic and scenic monuments of Tabriz at the beginning of the Qajar era. After that, construction flourished in Tabriz. Restorers also had the opportunity to analyze the damaged buildings. They were able to realize the weaknesses and understand the construction techniques of the buildings.

The measures taken to improve the behavior of buildings after this earthquake included observing principles such as limiting the height, weight reduction of the structures, and ensuring symmetry in buildings.

A large number of historic masonry buildings are currently identified in the central part of Tabriz. The load-bearing walls of most of these houses are made of 20×20×4 cm clay bricks and lime-based mortar. Six historical houses of Tabriz have been selected and are examined here. A brief description of the considered houses follows:

- Behnam Historic House: This house is located in the Maghsoudiyeh neighborhood of Tabriz, which is historical and close to the city center. Behnam house is next to the Ganjehizadeh and Ghadaki houses, but it is not connected to the surrounding buildings. The total height of the building is about 10 meters (Fig. 1(a), Fig. 2(a)). This building is used as one of the administrative offices of Islamic Art University of Tabriz, while its use in the past had been residential. The architectural style of the Behnam House is similar to other Iranian historical houses, which have an outer and inner courtyard and include an entrance corridor, portico and balcony. In the main view of the building, there is a porch with thick columns and delicate plastering, which is equivalent to the height of the pillars of the north porch. The rooms located at the corner of the great hall (Tanabi) are known as the Shah Neshin rooms. Knotting is one of the most important architectural features of Behnam House. This type of architecture is visible in the walls, inscriptions, windows and vaults, decorated with brick, tile, mirror, and plaster. The first floor's ceiling is vaulted and the ceilings of the two upper floors are made of wooden beams. The foundation of Behnam House is made of lime concrete and stone and has a height of about 80 cm.
- Ganjehizadeh Historic House: This house is another historical building in the Maghsoudiyeh neighborhood, which is now used as an educational building of Islamic Art University of Tabriz. This house is a single building with a height of about 11.4 m (Fig. 1(b), Fig. 2(b)). It has been built in three floors with a couple of rooms in a line without interior or exterior chambers. The architecture of this house is somewhat different from the traditional architectural style in Tabriz. Due to the use of sharp corners and rectangular windows without curves (common in Persian construction), it is a live testimony of the beginning of modern architecture. The main core of the house is the living room, known as the Tanbi Room, with corridors on two sides and side rooms known as Gushvar. The projection of the Gushvar rooms functions as a columned Iwan (an Iwan is a rectangular hall or space, usually vaulted, and walled on three sides, with one end entirely open). The Iwan includes five semicircular arches. In the north part of the Tanbi Room, a three-span Iwan overlooks the inside courtyard. Several parts of the basement have been built as a half-storey below the yard level.
- Nafisi Historic House: This building was built in the late Qajar period, with a total height of 4.5 m, and now is used as an educational building (Fig. 1(c), Fig. 2(c)). The roof of the building is a combination of a wooden frame structure and a masonry vault; the first floor has a vaulted structure with a flat floor, and the second floor has a wooden frame structure. The ground level and the basement are about 1.5 m lower than the yard level. The building's facade is a combination of masonry brick decoration and wooden windows.
- Kalantar Historic House: This building is a pavilion inside a garden called Kalantar (Fig. 1(d) Fig. 2(d)). This house, with a height of 8m, is owned by the Department of Education. Symmetry is fully observed in the plan of this house. The ground floor includes a porch with four pairs of columns, an entrance as a vestibule, two side rooms with a three-door pattern as a living room, and two extended rooms with a 1×3 module behind the living rooms, which are used as kitchens. The first floor also includes a corridor and four rooms.
- Sharbat Oghli Historic House: This historical house, located in the Sorkhab neighborhood, belongs to the late Qajar period). The building, with a height of about 7.2 m, is now at the disposal of the Iranology Foundation (Fig. 1(e), Fig. 2(e)). The mansion has been built on two floors with north and south yards. In terms of interior architecture, it has the main elements of an authentic Iranian house, i.e., Iwan and Gushvar (squinches). The entrance to the south yard is also a hallway with a brick arch.
- Ali Monsieur Historic House: This building belongs to the middle of the Qajar period, and its use has been changed to a constitutional museum. The total height of this building is 4.7 m (Fig. 1(f), Fig. 2(f)). The building has two courtyards with side rooms on three sides of the inner courtyard and two sides of the outer yard, leading to an asymmetrical plan for the building. The courtyards are connected by an entrance. Plaster decorations above the windows and a combination of plaster and brick in the facade are some of the decorations used in the building.

Despite many restrictions on performing tests related to determining the mechanical properties of wall materials, Aminifar et al. (Aminifar, Akhoundi, & Lourenço, 2022) conducted an experimental study on historical houses, including Ganjehizadeh, Nafisi and Kalantar, to examine the mechanical properties of masonry walls. According to ASTM guidelines, the compressive strength, shear modulus, and modulus of elasticity of the walls have been determined using the flat jack test (ASTM, 2020). Early applications of this technique on historical monuments clearly showed the high potential of its use. This is an on-site test in which two slots are created between four to six masonry courses in the wall mortar. Then, by placing flat hydraulic jacks in the slots, the necessary pressure is applied so that the desired part of the wall is exposed to vertical compression. In this test, the amount of pressure applied by the jacks is less than half the strength of the material. The deformation is measured by gauges and the strain is obtained by dividing this deformation by the distance between the gauges(ASTM, 2020). Due to the lack of information about the mechanical properties of Behnam, Ali Monsieur, and Sharbat Oghli houses, the procedure presented in Instructions for the Seismic Rehabilitation of Existing Buildings (Code 360)(Supervision & affairs, 2013) was used to calculate the mechanical properties of masonry materials. (Tab.1) shows the values considered for the mechanical properties of the masonry walls.

Tab. 1: Mechanical Properties of masonry materials for bearing walls and columns of the houses

Buildings	Material	f_m (N/mm^2)	τ_0 (N/mm^2)	E (N/mm^2)
Behnam	Brick	2.3	0.09	920
Ganjehizade	Brick	1.72	0.09	1966
Nafisi	Brick	0.81	0.09	1179
Kalantar	Brick	1.36	0.09	1276
Sharbat Oghli	Brick	2.3	0.09	920
Ali Monsieur	Brick	2.3	0.09	920
Note: f_m: Compressive strength		τ_0: Shear strength	E: Modulus of elasticity	

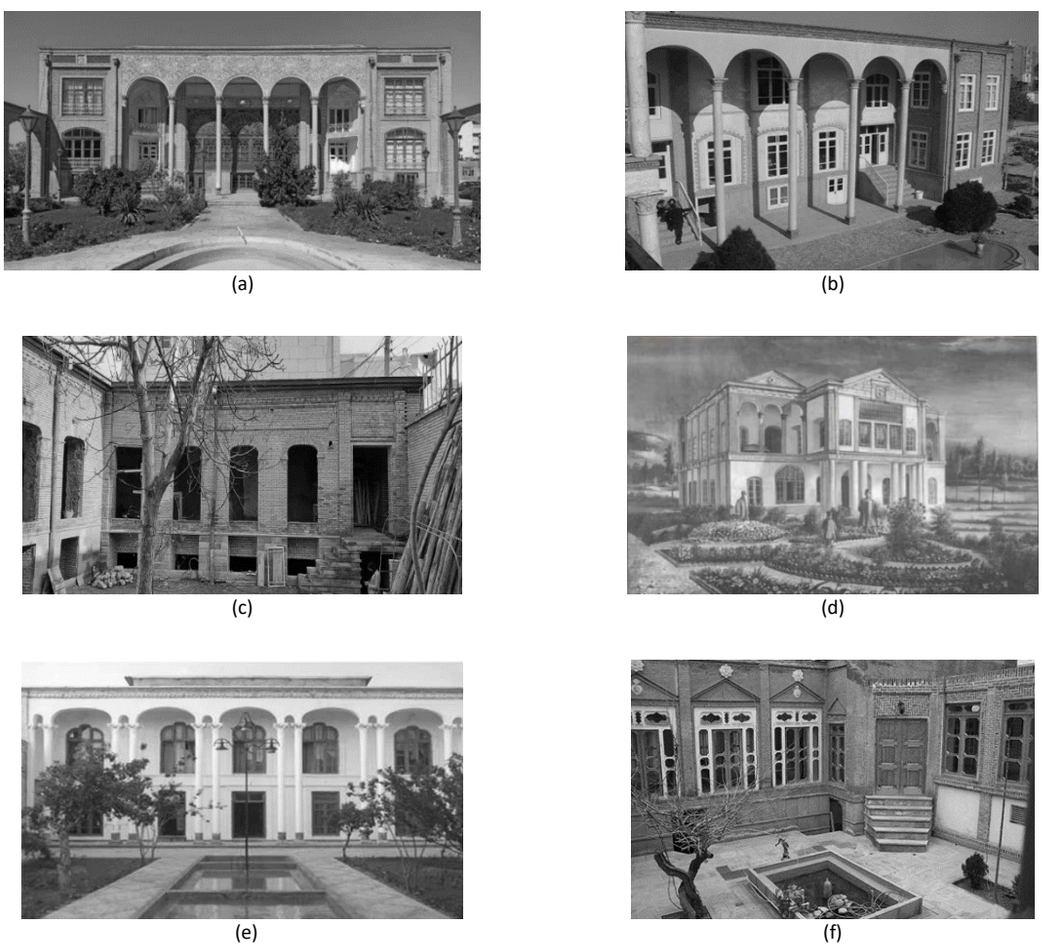

Fig. 1: Images of the six investigated historic houses. (a) Behnam House, (b) Ganjehizade House, (c) Nafisi House, (d) Kalantar House, (e) Sharbat Oghli House, (f) Ali Monsieur House

Fig. 2: Plans of the case studies. (a) Behnam House, (b) Ganjehizade House, (c) Nafisi House, (d) Kalantar House, (e) Sharbat Oghli House, (f) Ali Monsieur House.

3. Seismic parameters

The safety and protection of historic buildings against seismic hazards are defined based on two limit states. They include protecting residents and property against rare and higher-intensity earthquakes, known as Ultimate Limit State (SLU), and limiting functional and economic damage to buildings related to more frequent and lower-intensity earthquakes, i.e. Damage Limit State (SLD). The SLU examines the condition of buildings in earthquakes with a 10% probability of exceedance in 50 years and the SLD examines the condition of the buildings in earthquakes with a 50% probability of exceedance in 50 years.

The Iranian Seismic Code (Standard No. 2800)(IRSt2800) classifies the country into four seismic zones with different hazard levels. Zones 1 to 4 correspond to very high, high, medium, and low seismic hazards, respectively. According to this zonation, Tabriz belongs to zone 4 with a very high level of seismic hazard. This zone is characterized by a Peak Ground Acceleration (PGA) of 0.35g for a 10% exceedance probability in 50 years. The building's fundamental period, T, may be estimated as a function of its total height, H, according to [16] as Equation (1):

$$T = 0.05H^{0.75} \qquad (1)$$

4. LV1 assessment level

The simplified LV1 technique put out by DPCM (DPCM, 2005, 2011) aims to evaluate the territorial seismic vulnerability of architectural buildings. It is designed to evaluate the structures' lateral forces (or collapse acceleration) using a small set of geometrical and mechanical characteristics (as well as qualitative tools such as visual tests, construction features, and stratigraphic surveys). Consequently, the method's primary goal is to establish a risk rating amongst comparable structures to emphasize the necessity of later in-depth analyses utilizing LV2 and LV3 methodologies. The purpose of seismic vulnerability assessments at the territorial level is to provide the public administration with practical tools for highlighting the most urgent circumstances in the territory and establishing priorities for future actions. Implicitly, it is believed that in the event of more accurate LV3 assessments, lower LV1 collapse accelerations equate to lower safety indices.

Based on the assumption that the structure exhibits a global behavior with wall damage or collapse in its plan from shear and/or bending loads, the seismic capacity of the structure is evaluated. The initial step in the process is to calculate the shear strength at each story level along the primary axes of the structure, according to Equation (2), which are two orthogonal x and y directions.

$$F_i = \frac{\mu_i \xi_i A_i \tau_d}{\beta_i} \qquad (2)$$

Where F is the shear strength of a building, A is the area of the shear-resistant walls in the x and y directions in the i-th floor, β and μ are the irregularity of the plan and the uniformity of stiffness and strength of the masonry walls/piers, respectively, ξ denotes prevailing failure mode for the masonry piers and τdi is the shear strength of the i-th floor. After determining the shear strength, the acceleration a in the SLU is calculated according to Equation (3) as:

$$a_{SLU} = \frac{qF}{e^* M C_T} \qquad (3)$$

in which: q is the coefficient of behavior of the building, M and e* are seismic mass and the mass participation factor of the building, respectively, and CT is a sort of amplification factor. The parameter q can be considered 3 for buildings with regular height, and 2.5 for other buildings with an additional coefficient of resistance of 1.5. In order to calculate the percentage of the participating mass e*, two equations have been proposed, Equation (4), the first formula is referred to a storey mechanism which may happen when the k-th floor is weaker than the others, so that the construction is unable to exploit the dissipative capability, in this equation N is the number of the floors, while the second expression refers to the uniform failure of the building (the lowest floor).

$$e^* = \frac{N+1-K}{N}$$
$$e^* = 0.75 + 0.25N^{-0.75} \qquad (4)$$

According to DPCM (DPCM, 2005), the seismic safety index, Is, can be calculated based on Equation (5). If the safety index is greater than one, the building is safe against seismic actions in the area, and if it is less than one, it does not have sufficient safety.

$$I_S = \frac{a_{SLU}}{\gamma_1 Sa_g} \qquad (5)$$

Where γ1 is the building importance factor, ag is the basis of the PGA for earthquakes with a return period of 475 years and S is the soil coefficient. (Tab. 2. 2) provides the LV1 results and shows that the studied buildings are in critical condition. As shown in Tab. 2, the building's seismic safety index (Is) is much lower than 1.

5. LV3 assessment level

Using numerical models, which can simulate the overall structural behavior and assess the accelerations that cause the structure to reach its limit state, forms the basis of the third level of study. It is more challenging to consistently evaluate the building's seismic capacity at this level compared to LV1 because it necessitates a deeper understanding of both the construction methods and structural details, as well as the material properties (at least the shear and compressive strength of the materials). The depth of the research and the quantity of experimental data accessible directly impact the model's dependability and, subsequently, the outcomes.

An examination of the literature reveals that many historical structures have been modeled using a macro modeling approach (Lourenço, Rots, & Blaauwendraad, 1995). There are two fundamental approaches to modeling and analyzing structures. One of these is the finite element method (FEM), which may produce a geometric model and precise predictions of the behavior of the system. Unfortunately, it has a very high computational cost. On the other hand, a streamlined methodology, like the equivalent frame macro-element method, may be used to describe the geometric characteristics and material qualities. The equivalent frame technique is the foundation for the modeling and analysis methodology in the 3MURI program (. S.T.A.2018). (Fig. 3) illustrates a three-dimensional model for each case study based on identifying the equivalent frame of vertical (pier) and horizontal (spandrel) parts. The structures were pushed with increasing sets of lateral forces, and a displacement-based analysis (pushover) was carried out on the buildings. The analysis was performed on the selected buildings subjected to monotonically incremental lateral load and, simultaneously, constant gravity loads. In its conventional form, the pushover approach can be an efficient alternative to more expensive computational inelastic analyses, e.g., non-linear time-history. It can provide helpful information on the damage that occurred in the building under seismic loads. The analyses were carried out along the main directions (-/+ x and -/+ y).

Tab. 2: Parameters required by LV1

House	M (kg)	T	e*	q	C_T	I_s	F_{SLU} (KN)	
							x	y
Behnam	1704700	0.281	0.85	3	2.5	0.240	1872	3495
Ganjehizade	2577600	0.310	0.85	3	2.5	0.278	2919	2454
Nafisi	197100	0.154	0.89	3	2.5	0.576	633	405
Kalantar	774200	0.235	0.89	3	2.5	0.474	1950	1370
Sharbat Oghli	1384100	0.217	0.89	3	2.5	0.538	2661	4102
Ali Monsieur	231500	0.159	0.89	3	2.5	0.633	934	524

Each floor level's center of mass received the lateral stresses. The NTC18 (NTC, 2018) recommends accounting for accidental eccentricities of the mass centers at each level equivalent to 5% of the maximum length of the building in a direction perpendicular to the seismic activity in order to counterbalance any uncertainties on the position of the centers of mass. The pushover analysis was conducted by considering two lateral load patterns applied at the storey levels and acting in the two orthogonal directions coinciding with the principal axes of the building. These forces included a system of forces proportional to mass and a system of forces proportional to the first mode shape of the structure. As a result, a total of twenty-four pushover curves were obtained. The reference parameters for the verification were the capacity and demand displacements, dm and dt respectively. Qu is the ratio between the system shear force, supposed indefinitely elastic, and the yielding strength of the equivalent nonlinear system (behavior factor) with the limitation of qu<3 (Eurocode8, 2005).
The weakest response with the lowest safety factor was selected as the most vulnerable case for each direction. The safety factor is the ratio between the limit capacity acceleration for each limit state, independent of the seismic spectrum, and the spectral acceleration for each limit state, dependent on the seismic spectrum. (Tab. 3) Two different load distributions were considered to show the results of the worst load conditions for the x and y directions. The uniform load is distributed proportionally to the floor masses, and the static force is proportional to the linearized first mode of the structure; in this table, ά is equivalent to Is (seismic safety index).
Graphs in (Fig. 4) compare the case studies' nonlinear responses, with the y direction associated with base shear and the x direction related to displacement. The graphs show that the initial stiffness in all charts was linear except for the pushover graph of the y direction in Kalantar's historic house. The historic houses of Kalantar and Sharbat Oghli, due to the symmetrical plan in the x direction, had similar structural behavior. In contrast, the lateral strength of Sharbat Oghli's historic house in the y direction was much more than that of Kalantar's historic house. Based on the results from the pushover analysis depicted in the graphs, Ganjehizad's historic house has maximum lateral strength in both directions, x, and y, with approximately 8700 kN and 5900 kN, respectively, which is due to the regular distribution of the bearing wall system. Furthermore, the minimum lateral strength in the y direction is related to Kalantar's historic house with 250 kN, and the x direction belongs to Behnam with 1880 KN. According to the graphs, the maximum displacement of 3 cm in the x direction is related to Sharbat Oghli's historical house due to the lack of the distribution bearing wall system in the mentioned direction, as well as the minimum displacement that occurred was related to the Ganjehizad's historic house with 0.6 cm in the x direction.

Tab. 1: Results related to the worst load conditions deriving from LV3 analysis level

House	Dir.	Load distribution	q_u	α
Behnam	-X	Static forces	6.56	0.373
	+Y	Uniform	0.14	18.59
Ganjehizade	-X	Uniform	2.86	0.742
	+Y	Static forces	3.68	0.738
Nafisi	+X	Static forces	3.61	0.821
	-Y	Static forces	5.11	0.693
Kalantar	+X	Static forces	5.1	0.758
	+Y	Static forces	8.07	0.582
Sharbat Oghli	+X	Static forces	5.88	0.637
	+Y	Static forces	3.14	0.828
Ali Monsieur	-X	Static forces	2.62	0.958
	+Y	Uniform	4.71	0.733

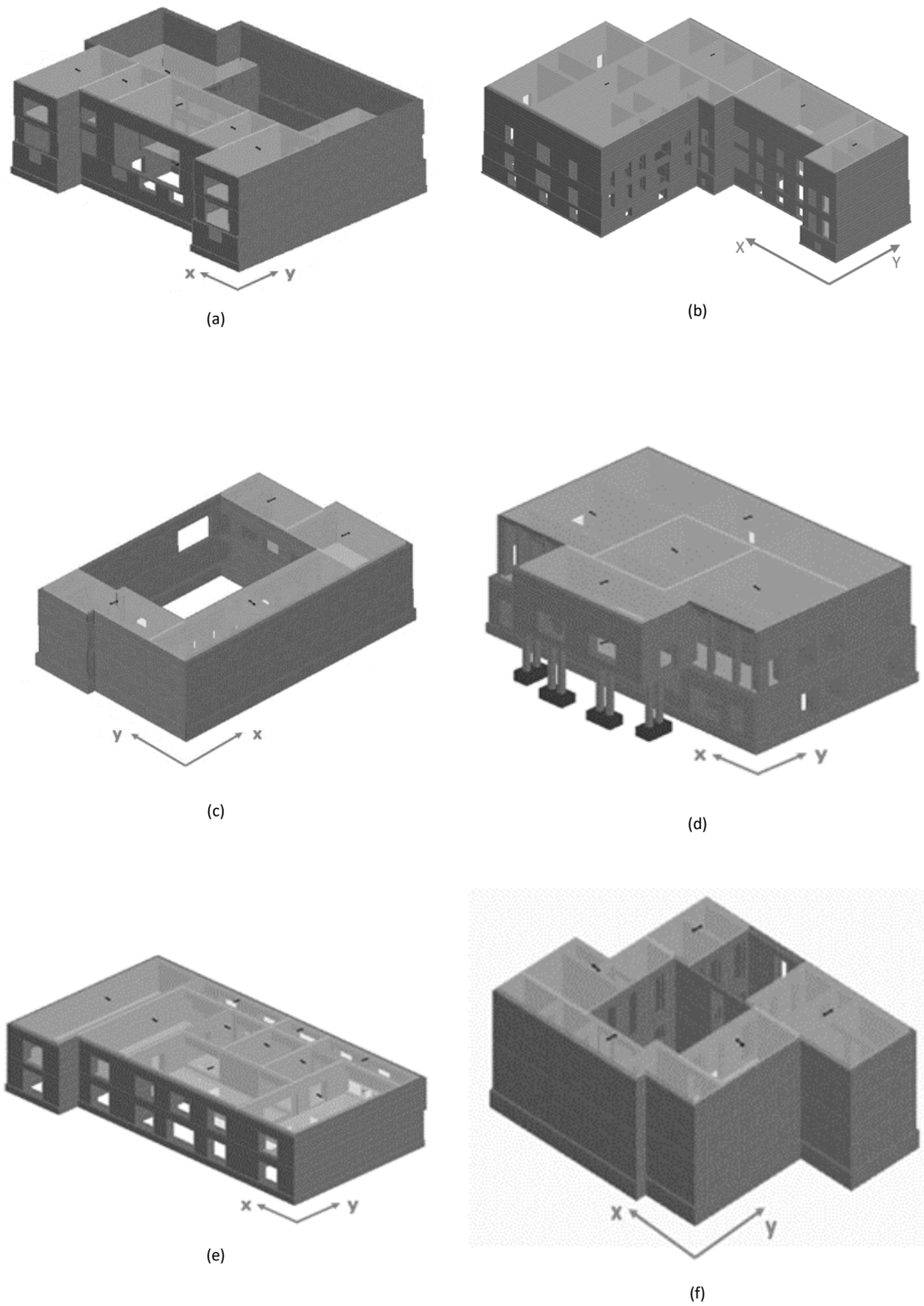

Fig. 3: Three-dimensional view of the structural-element model. (a) Behnam house, (b) Ganjehizade house, (c) Nafisi house, (d) Kalantar house, (e) Sharbat Oghli house, (f) Ali Monsieur house.

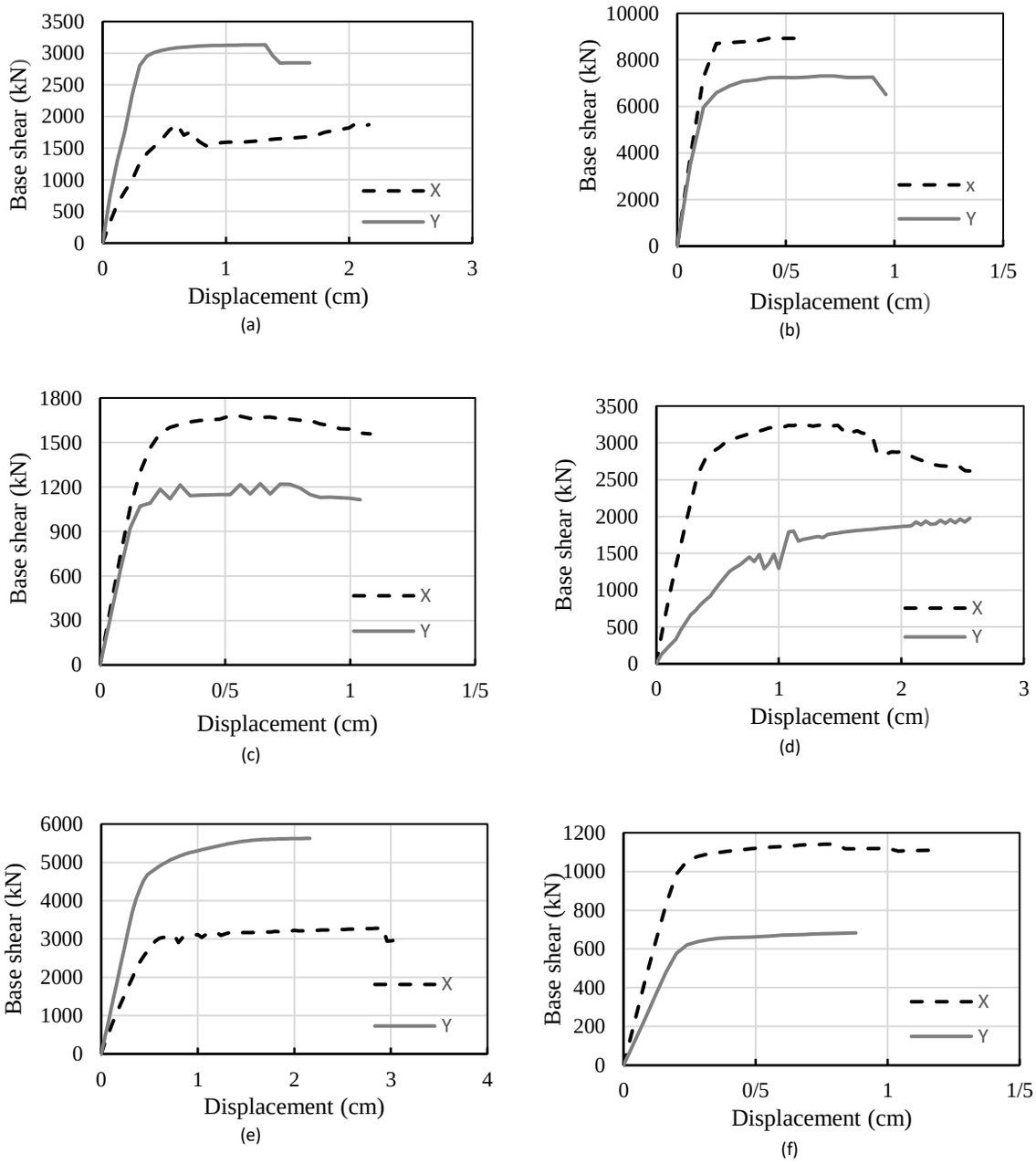

Fig. 4: Comparison of nonlinear responses of the case studies: (a) Behnam house, (b) Ganjehizade house, (c) Nafisi house, (d) Kalantar house, (e) Sharbat Oghli house, (f) Ali Monsieur house.

6. Comparison of the results obtained through LV1 and LV3 assessment methods

As already indicated, the two seismic assessment techniques examined here do not function as alternatives to each other but rather as two separate degrees of evaluation. For more conclusive findings and advice for academics and practitioners, the comparison should be expanded to include a statistically significant number of the current type of buildings.

According to (Tab. 4), which refers to the weaker direction, the outcomes of each house's seismic evaluation levels LV1 and LV3 were compared. Even after accounting for nonlinear behavior and displacement capacity, the LV3 study results show that each building's weak direction is the same as its LV1 direction. Regarding the capacity/demand interaction regarding PGA correlating to the attainment of the SLU, it is observed that for all case studies, the value of this parameter calculated by the LV1 assessment level, IS, is smaller than that acquired through LV3, ά.

Tab. 2: Comparison between LV1 and LV3 analysis results

House		ά	I_s	F_{SLU} (kN)
Behnam	LV1	–	0.240	1872
	LV3	0.373	–	1880.2
Ganjehizade	LV1	–	0.278	2454
	LV3	0.738	–	5960.41
Nafisi	LV1	–	0.576	405
	LV3	0.693	–	924.76
Kalantar	LV1	–	0.476	1370
	LV3	0.582	–	1387.45
Sharbat Oghli	LV1	–	0.538	2661
	LV3	0.637	–	2829.8
Ali Monsieur	LV1	–	0.633	524
	LV3	0.733	–	621.51

7. Conclusion

In this paper, six historical masonry houses from the 19th to early 20th century were seismically investigated to stress the need to develop international guidelines for dealing with historical buildings. The buildings were selected from the historical context of Tabriz, mainly built in the Qajar era (1796-1925). Six buildings were analyzed based on the Italian Guidelines on cultural heritage (DPCM, 2005, 2011). First, seismic safety indexes of the buildings were calculated based on simplified mechanical equations in level 1 (LV1, simplified mechanical models). The results revealed that the seismic safety indexes of all the examined buildings were less than one, which proved their non-resistance status.

To determine seismic safety indexes of the buildings based on the level 3 (LV3, pushover analysis), 3Muri software(. S.T.A.2018) was used. Based on the results, the investigated houses have an inadequate seismic safety. Also, it was found that stiffness in the push over graphs was linear almost until collapse, except for the push-over graph of the y direction in Kalantar's historic house. Also based on the results from the push-over analysis depicted in the graphs, Ganjehizad's historic house has maximum lateral strength in both directions x and y, furthermore the minimum lateral strength in the x and y direction is related to Ali Monsieur. Therefore, preventive reinforcement, thorough mechanic soil studies, constant maintenance, monitoring of the limestone blocks, and enhancing the length of walls in the weak directions shall be addressed.

Overall, the results of the LV3 approach confirm the low seismic safety indexes found with the territorial level analysis (LV1). The LV3 safety indexes are always higher than the LV1 safety indexes, demonstrating the consistency of the two methodologies. However, it is essential to keep in mind that these two methodologies do not compete with one another; instead, they belong to two distinct levels of evaluation, and as a result, more cautious outcomes were anticipated for the LV1 in comparison to the LV3 evaluation method, as were shown.

References

3Muri 10.9.0 - User's Manual. (S.T.A.2018). ., S. T. A. D. s. [Mobile application software]

Aminifar, E., Akhoundi, F., & Lourenço, P. B. (2022). Verification of Mechanical Properties of Historical Brick Masonry Walls with Masonry Quality Index Method in Iran. International journal of architectural heritage, 1-11. doi:https://doi.org/10.1080/15583058.2022.2089072

ASTM. (2020). ASTM-C1197-20e1: Standard test method for in situ measurement of masonry deformability properties using the flat-jack method. In: ASTM International.

Biglari, M., D'Amato, M., & Formisano, A. (2021). Rapid seismic vulnerability and risk assessment of Kermanshah historic mosques. The Open Civil Engineering Journal, 15(1), 135-148. doi:http://dx.doi.org/10.2174/1874149502115010135

Ceroni, F., Casapulla, C., Cescatti, E., Follador, V., Prota, A., & da Porto, F. (2022). Damage assessment in single-nave churches and analysis of the most recurring mechanisms after the 2016–2017 central Italy earthquakes. Bulletin of Earthquake Engineering, 1-29. doi:https://doi.org/10.1007/s10518-022-01507-8

D'Ayala, D., & Ansal, A. (2012). Non linear push over assessment of heritage buildings in Istanbul to define seismic risk. Bulletin of Earthquake Engineering, 10(1), 285-306. doi:https://doi.org/10.1007/s10518-011-9311-1

DPCM. (2005). Evaluation and reduction of seismic risk of cultural heritage with reference to the Technical Standards for Constructions promulgated by the Ministry of Infrastructure and Transport

DPCM. (2011). Evaluation and reduction of seismic risk of cultural heritage with reference to the Technical Standards for Constructions promulgated by the Ministry of Infrastructure and Transport on 2003.

Eurocode8. (2005). Eurocode 8: Design of structures for earthquake resistance-part 1: general rules, seismic actions and rules for buildings. Brussels: European Committee for Standardization.

Goded, T., Lewis, A., & Stirling, M. (2018). Seismic vulnerability scenarios of Unreinforced Masonry churches in New Zealand. Bulletin of Earthquake Engineering, 16(9), 3957-3999. doi:https://doi.org/10.1007/s10518-018-0351-7

Hejazi, M. (2003). Seismic vulnerability of Iranian historical domes. WIT Transactions on The Built Environment, 72. doi:https://doi.org/10.2495/ER030151

IRSt2800. Iranian Code of Practice for Seismic Resistant Design of Buildings,4th Revision, . In Building and Housing Research Center, Tehran, IRAN, 2015.

Lourenço, P., Rots, J. G., & Blaauwendraad, J. (1995). Two approaches for the analysis of masonry structures: micro and macro-modeling. HERON, 40 (4), 1995.

Lourenço, P. B. (2002). Computations on historic masonry structures. Progress in Structural Engineering and Materials, 4(3), 301-319. doi:https://doi.org/10.1002/pse.120

NTC. (2018). Aggiornamento delle «Norme Tecniche per le Costruzioni». In Italian Goverment: Rome, Italy.

Supervision, D. f. S., & affairs, T. s. (2013). Instructions for seismic improvement of existing buildings)code360). Vice President for Strategic Planning and Oversight.

Torelli, G., D'Ayala, D., Betti, M., & Bartoli, G. (2020). Analytical and numerical seismic assessment of heritage masonry towers. Bulletin of Earthquake Engineering, 18(3), 969-1008. doi:https://doi.org/10.1007/s10518-019-00732-y

Yang, D., Yuhang, L., & Aiqun, L. (2023). Seismic safety assessments of historical timber buildings using updated finite element models: Case study of Yingxian wooden pagoda, China. Journal of Building Engineering, 63. doi:https://doi.org/10.1016/j.jobe.2022.105454

Zizi, M., Corlito, V., Lourenço, P. B., & De Matteis, G. (2021). Seismic vulnerability of masonry churches in Abruzzi region, Italy. Paper presented at the Structureshttps://doi.org/10.1016/j.istruc.2021.03.013.

مقالهٔ پژوهشی

DOI: 10.52547/ciauj.8.2.524

سال هشتم، شماره دوم – پاییز و زمستان ۱۴۰۲

عنوان ارزیابی ایمنی لرزه ای بناهای بنایی تاریخی ایران کاربرد در دوره قرن ۱۹ و اوایل قرن ۲۰

سمیه غلامی [۱] ، فرهاد آخوندی [۲*]، سید جعفر هاشمی[۳]، پائولو بی لورنسو[۴]

[۱] کارشناسی‌ارشد استحکام‌بخشی بناهای تاریخی، دانشگاه هنر اسلامی تبریز، تبریز، ایران.
[۲] دانشیار، دانشکده معماری و شهرسازی، دانشگاه هنر اسلامی تبریز، تبریز، ایران.
[۳] استادیار، گروه مهندسی عمران، دانشکده فنی مهندسی، دانشگاه اراک، اراک، ایران.
[۴] استاد، گروه مهندسی عمران، دانشگاه مینهو، گیماریش، پرتغال.
(تاریخ دریافت مقاله: ۱۴۰۲/۰۸/۱۰، تاریخ پذیرش مقاله: ۱۴۰۲/۱۰/۰۹)

چکیده

شهر تبریز بر روی یک گسل تکتونیکی بزرگ و فعال واقع شده است که متعلق به سیستم پیچیده‌ای است و گسل آناتولی شمالی در ترکیه را به گسل البرز در ایران متصل می‌کند. امروزه بیش از ۶۰۰ ساختمان تاریخی در تبریز شناسایی شده است که نیاز به تحلیل لرزه‌ای و حفاظت دارند. با توجه به عدم وجود دستورالعمل‌های مربوط به بناهای تاریخی، ارزیابی ایمنی لرزه‌ای این بناها به تأخیر افتاده است؛ بنابراین هدف اصلی این مطالعه ارزیابی ایمنی لرزه‌ای ساختمان‌های تاریخی با استفاده از دستورالعمل‌های ایتالیایی است و نشان می‌دهد که این رویکرد اساس یک ارزیابی درست بر اساس روش‌های علمی و محاسباتی را تأیید می‌کند. شش بنای تاریخی مربوط به دوره قاجار، به عنوان نمونه موردی انتخاب شدند. آسیب‌پذیری لرزه‌ای ساختمان‌های مذکور با استفاده از دو سطح ارزیابی مختلف معرفی شده در دستورالعمل‌های ایتالیایی در مورد میراث فرهنگی، شامل محاسبات دستی که با استفاده از روش‌های مکانیکی انجام می شوند و تحلیل عددی بناها که با استفاده از نرم‌افزار انجام می شوند، مورد بررسی قرار گرفت. علاوه بر این، کارایی و دقت روش مکانیکی ارائه شده در سطح یک در ارزیابی ایمنی لرزه‌ای در مقایسه با نتایج تحلیل عددی مورد بررسی قرار گرفت. نتایج نشان‌دهنده آسیب‌پذیری لرزه‌ای ساختمان‌های مورد بررسی به عنوان نمونه‌های انتخاب شده از میان خانه‌های تاریخی تبریز است. همچنین نتایج نشان می‌دهد که روش‌های ارزیابی به کار گرفته شده جایگزین یکدیگر نیستند؛ بلکه متعلق به دو سطح مختلف ارزیابی و قابل‌مقایسه هستند و سطح اول رویکرد محافظه‌کارانه‌ای را در نظر می‌گیرد.

واژگان کلیدی

ارزیابی ایمنی، خانه تاریخی، گایدلاین ایتالیا، تحلیل غیرخطی.

* نویسنده مسئول مکاتبات: f.akhoundi@tabriziau.ac.ir

مقدمه

ایران به دلیل قرار گرفتن در کمربند لرزه‌خیز آلپ- هیمالیا در طول تاریخ در معرض زلزله‌های شـــدید و ویرانگر بوده اســـت (Biglari, D'Amato, & Formisano, 2021). این کشـــور یک تمدن باســـتانی اســـت که آثار و بناهای تاریخی زیادی دارد. تبریز چهارمین شهر بزرگ ایران است و حدود ۱,٤ میلیون نفر جمعیت دارد. این شهر بر روی یک گسل زمین ساختی بزرگ و فعال قرار دارد که متعلق به سیستم پیچیده‌ای است که گسل آناتولی شمالی در ترکیه را به البرز در ایران متصل می‌کند. سوابق لرزه نگاری تاریخی تبریز نشان می‌دهد این شهر تاکنون چندین زلزله ویرانگر را تجربه کرده است.

خطر لرزه‌ای بالا در تبریز لزوم ارزیابی لرزه‌ای بناهای تاریخی را توجیه می‌کند. ایتالیا تنها کشوری است که تاکنون توانسته است دستورالعملی جهت ارزیابی ایمنی بناهای تاریخی تنظیم نماید (DPCM, 2005, 2011). این دستورالعمل رویکرد جدیدی را برای ارزیابی ایمنی لرزه‌ای از طریق یک روش چندســـطحی معرفی می‌کند. DPCM فرآیند ارزیابی را بســـته به اهداف انجام می‌دهد و شامل سه سطح ارزیابی است که به شرح زیر تعریف می‌شود.

- سطح ۱ (LV1): تجزیه‌وتحلیل کیفی و ارزیابی با مدل‌های مکانیکی ساده شده،
- سطح ۲ (LV2): ارزیابی لرزه‌ای به منظور انجام مداخلات محلی در ساختمان،
- سطح ۳ (LV3): ارزیابی کلی پاسخ لرزه‌ای ساختمان.

ایمنی لرزه‌ای برای هر سطح توسط شاخصی که مقایسه بین تقاضای لرزه‌ای مورد انتظار و ظرفیت لرزه‌ای را خلاصه می‌کند، ارزیابی می‌شـود. شـایان ذکر اسـت که LV1 و LV3 به ترتیب مبتنی بر مدل‌های کلی سـاده و دقیق هسـتند که هر دو با اثر ترکیبی دیافراگم‌های کف و پاسـخ درون‌صـفحه دیوارهای سـازه نشـان داده می‌شـوند؛ بنابراین می‌توان نتیجه گرفت که آنها قابل‌مقایسـه هستند.

در پژوهش حاضر، شش خانه تاریخی ساخته شده در دوره قاجاریه (۱۳۰٤-۱۱۷۵) در تبریز برای بحث در مورد خطر لرزه‌ای انتخاب شده است که شامل خانه‌های بهنام، گنجه‌ای‌زاده، نفیسی، علی مسیو، شربت‌اوغلی و کلانتر می‌شود. این ساختمان‌ها بر اساس دستورالعمل‌های ایتالیایی در مورد میراث فرهنگی (DPCM)(DPCM, 2005, 2011) برای وضعیت حدنهایی، یعنی زلزله‌هایی با دوره بازگشت ٤۷۵ ساله (احتمال ۱۰ درصد تجاوز در ۵۰ سال) ارزیابی شده‌اند. همچنین میزان اعتبار رویکرد استفاده شده در سطح یک این ارزیابی نیز مورد بحث قرار گرفته است.

۱. نمونه‌های مورد مطالعه

در حال حاضر تعداد زیادی ساختمان بنایی تاریخی در بخش مرکزی تبریز شناسایی شده است. دیوارهای باربر اغلب این خانه‌ها از آجر سفالی ۲۰×۲۰×٤ سانتی‌متر و ملات آهک ساخته شده است. شش خانه بنایی تاریخی شهر تبریز شامل خانه‌های بهنام، گنجه‌ای‌زاده، نفیسی، علی مسیو، شربت‌اوغلی و کلانتر انتخاب شده (شکل ۱ و شکل ۲) و در این مطالعه مورد بررسی قرار گرفته اســـت. اطلاعات مربوط به خصـــوصـــیات مکانیکی این بناها از مطالعات پیشـــین (Aminifar, Akhoundi, & Lourenço, 2022) و همچنین کد 360 (code360, 2013) استخراج شده است (جدول ۱).

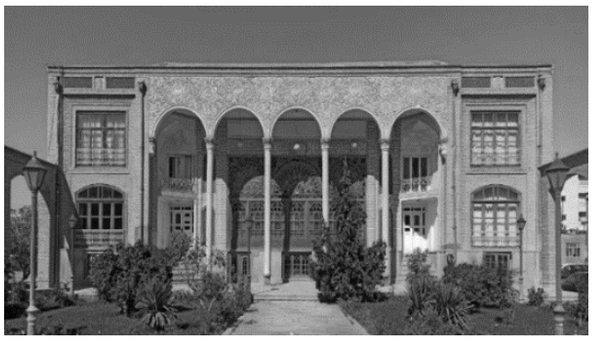

(الف)

(ب)

(پ)

(ت)

(ث)

(ج)

شکل ۱: تصاویر خانه‌های مورد مطالعه: الف) بهنام، ب) گنجه‌ای‌زاده، پ) نفیسی، ت) کلانتر، ث) شربت‌اوغلی، ج) علی مسیو

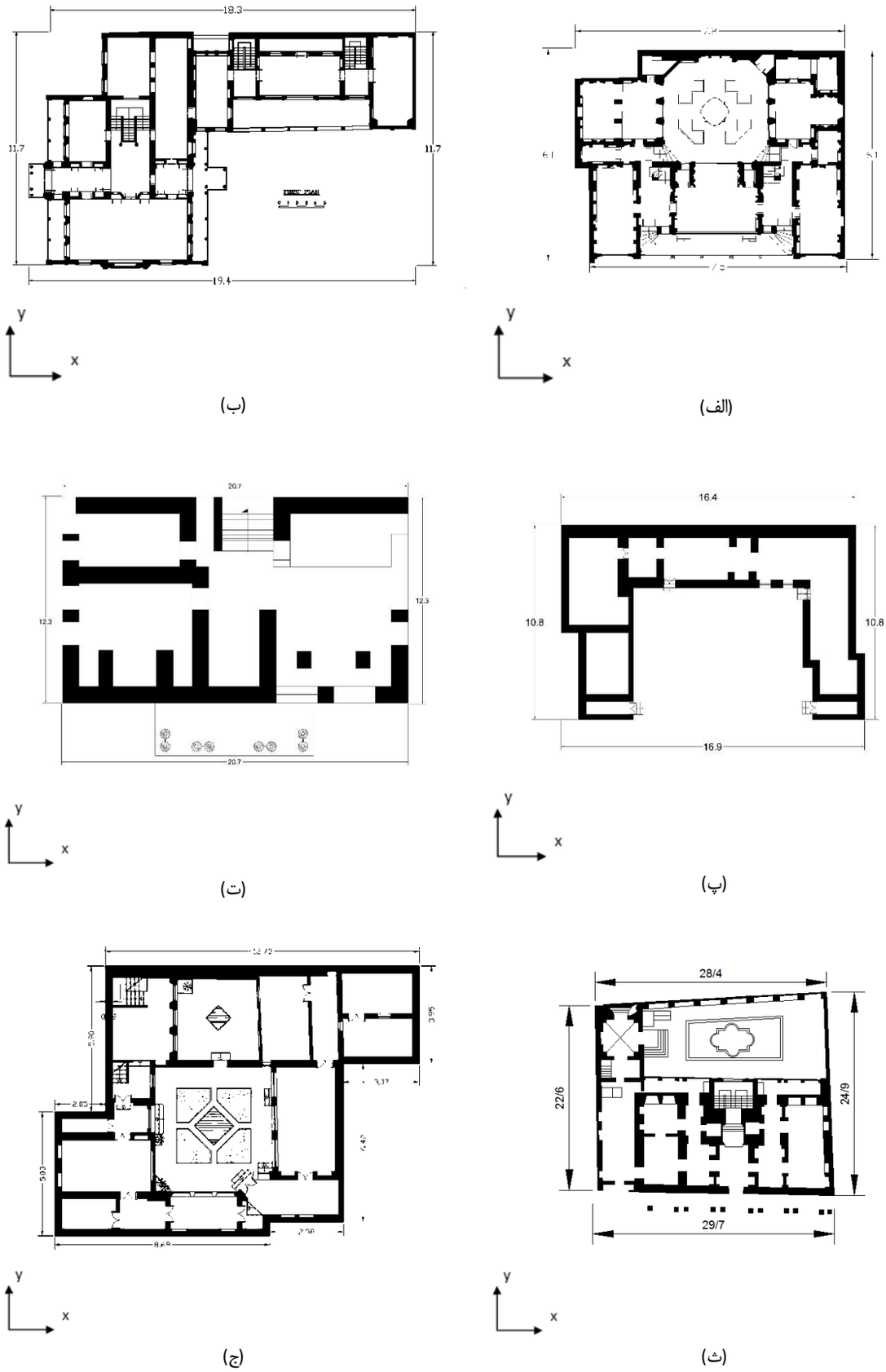

شکل ۲: پلان خانه‌های مورد مطالعه: الف) بهنام، ب) گنجه‌ای‌زاده، پ) نفیسی، ت) کلانتر، ث) شربت‌اوغلی، ج) علی مسیو

۲. پارامترهای لرزه‌ای

آیین‌نامه زلزله ایران- استاندارد ۲۸۰۰ (IRSt2800) کشور را به چهار ناحیه لرزه‌خیز طبقه‌بندی می‌کند که با سطوح خطر متفاوت مشخص می‌شود. مناطق ۱ تا ٤ به ترتیب با خطرات لرزه‌ای بسیار زیاد، زیاد، متوسط و کم مطابقت دارند. طبق این پهنه‌بندی، تبریز متعلق به منطقه ٤ با خطر بسیار بالایی از خطر لرزه‌ای است و شتاب اوج زمین در حالت حدنهایی 0.35g (PGA) است.

۳. روش کار

هدف روش ساده شده سطح یک ارائه شده توسط (DPCM ۲۰۰۵، ۲۰۱۱) DPCM ارزیابی آسیب‌پذیری لرزه‌ای سرزمینی ساختمان‌ها است. این رویکرد جهت ارزیابی نیروهای جانبی سازه‌ها با استفاده از مجموعه کوچکی از ویژگی‌های هندسی و مکانیکی (و همچنین ابزارهای کیفی مانند آزمایش‌های بصری، ویژگی‌های ساخت و بررسی چینه‌شناسی) طراحی شده است. در نتیجه هدف اصلی این روش ارائه رتبه‌بندی وضعیت ایمنی بناهای مورد بررسی به منظور تأکید بر ضرورت تحلیل‌های عمیق‌تر با استفاده از روش‌های ارائه شده در سطح دو و سه است.

(جدول ۲) نتایج بررسی‌های حاصل از سطح اول را ارائه می‌دهد و نشان می‌دهد که ساختمان‌های مورد مطالعه در شرایط بحرانی هستند. همان‌طور که مشاهده می‌شود، شاخص ایمنی لرزه‌ای (Is) ساختمان‌ها کمتر از ۱ است.

جدول ۱: خصوصیات مکانیکی مصالح بنایی دیوارهای باربر و ستون‌های بناهای مورد مطالعه

Buildings	Material	f_m (N/mm²)	τ_0 (N/mm²)	E (N/mm²)
بهنام	آجری	۲/۳	۰/۰۹	920
گنجه‌ای‌زاده	آجری	۱/۷۲	۰/۰۹	1966
نفیسی	آجری	۰/۸۱	۰/۰۹	1179
کلانتر	آجری	۱/۳۶	۰/۰۹	1276
شربت‌اوغلی	آجری	۲/۳	۰/۰۹	920
علی مسیو	آجری	۲/۳	۰/۰۹	920
f_m: مقاومت فشاری		τ_0 : مقاومت برشی		E : مدول الاستیسیته

جدول ۲: پارامترهای حاصل از سطح اول ارزیابی

خانه	وزن مؤثر لرزه‌ای (kg)	پریود سازه T	درصد جرم مشارکت‌کننده e*	ضریب رفتار سازه q	ضریب تقویت سازه C_T	شاخص ایمنی لرزه‌ای I_s	مقاومت برشی بنا F_{SLU} (KN)	
							x	y
بهنام	۱۷۰٤۷۰۰	۰/۲۸۱	۰/۸۵	۳	۲/۵	۰/۲٤۰	۱۸۷۲	۳۴۹۵
گنجه‌ای‌زاده	۲۵۷۷٦۰۰	۰/۳۱۰	۰/۸۵	۳	۲/۵	۰/۲۷۸	۲۹۱۹	۲۴۵۴
نفیسی	۱۹۷۱۰۰	۰/۱٥٤	۰/۸۹	۳	۲/۵	۰/٥۷٦	٦۳۳	۴۰۵
کلانتر	۷۷٤۲۰۰	۰/۲۳٥	۰/۸۹	۳	۲/۵	۰/٤۷٤	۱۹٥۰	۱۳۷۰
شربت‌اوغلی	۱۳۸٤۱۰۰	۰/۲۱۷	۰/۸۹	۳	۲/۵	۰/٥۳۸	۲٦٦۱	۴۱۰۲
علی مسیو	۲۳۱٥۰۰	۰/۱٥۹	۰/۸۹	۳	۲/۵	۰/٦۳۳	۹۳٤	٥۲۴

تحلیل عددی ساختمان بر اساس سطح سوم دستورالعمل ایتالیایی توسط نرم‌افزار Muri3 (. S.T.A.2018) انجام شده است (شکل ۳). Muri 3 نرم‌افزاری برای تحلیل لرزه‌ای سازه‌های بنایی و کامپوزیت است که در ایتالیا توسعه یافته است؛ و از رویکرد تحلیل مبتنی بر جابجایی استفاده می‌کند و کل نیروی افقی مورد نیاز برای حرکت ساختمان به سمت جابجایی هدف را تعیین می‌کند. (جدول ۳) و (شکل ٤) نتایج بدترین شرایط بارگذاری را در دو جهت x و y نشان می‌دهند، دو توزیع بار مختلف در نظر گرفته شده است. بار یکنواخت متناسب با توده‌های کف توزیع می‌شود و نیروی استاتیکی متناسب با حالت اول خطی سازه است، در این جدول ά معادل Is (شاخص ایمنی لرزه‌ای) است.

٤. مقایسه نتایج دو سطح ارزیابی

نتایج حاصل از ارزیابی لرزه‌ای سطوح ارزیابی اول و سوم برای هر خانه مقایسه شد (جدول ٤). بر اساس نتایج حتی پس از محاسبه رفتار غیرخطی و ظرفیت جابجایی، جهت ضعیف هر ساختمان در هر دو روش یکسان است. با توجه به رابطه ظرفیت/تقاضا در رابطه با PGA مرتبط با دستیابی به SLU، مشاهده می‌شود که برای همه بناها، مقدار شاخص ایمنی لرزه‌ای محاسبه شده توسط سطح اول ارزیابی کوچک‌تر از مقدار به دست آمده از طریق سطح سوم است.

جدول ۳: نتایج مربوط به بدترین شرایط بارگذاری ناشی از تحلیل LV3

خانه	جهت	بار توزیع شده	q_u	α
بهنام	-X	بار استاتیکی	۶٫۵۶	۰٫۳۷۳
	+Y	یکنواخت	۰٫۱۴	۱۸٫۵۹
گنجه‌ای‌زاده	-X	یکنواخت	۲٫۸۶	۰٫۷۴۲
	+Y	بار استاتیکی	۳٫۶۸	۰٫۷۳۸
نفیسی	+X	بار استاتیکی	۳٫۶۱	۰٫۸۲۱
	-Y	بار استاتیکی	۵٫۱۱	۰٫۶۹۳
کلانتر	+X	بار استاتیکی	۵٫۱	۰٫۷۵۸
	+Y	بار استاتیکی	۸٫۰۷	۰٫۵۸۲
شربت‌اوغلی	+X	بار استاتیکی	۵٫۸۸	۰٫۶۳۷
	+Y	بار استاتیکی	۳٫۱۴	۰٫۸۲۸
علی مسیو	-X	بار استاتیکی	۲٫۶۲	۰٫۹۵۸
	+Y	یکنواخت	۴٫۷۱	۰٫۷۳۳

جدول ۴: مقایسه نتایج دو سطح ارزیابی

خانه	-	ά	I_S	F_{SLU} (kN)
بهنام	سطح ۱	–	۰٫۲۴۰	۱۸۷۲
	سطح ۳	۰٫۳۷۳	–	۱۸۸۰٫۲
گنجه‌ای‌زاده	سطح ۱	–	۰٫۲۷۸	۲۴۵۴
	سطح ۳	۰٫۷۳۸	–	۵۹۶۰٫۴۱
نفیسی	سطح ۱	–	۰٫۵۷۶	۴۰۵
	سطح ۳	۰٫۶۹۳	–	۹۲۴٫۷۶
کلانتر	سطح ۱	–	۰٫۴۷۶	۱۳۷۰
	سطح ۳	۰٫۵۸۲	–	۱۳۸۷٫۴۵
شربت‌اوغلی	سطح ۱	–	۰٫۵۳۸	۲۶۶۱
	سطح ۳	۰٫۶۳۷	–	۲۸۲۹٫۸
علی مسیو	سطح ۱	–	۰٫۶۳۳	۵۲۴
	سطح ۳	۰٫۷۳۳	–	۶۲۱٫۵۱

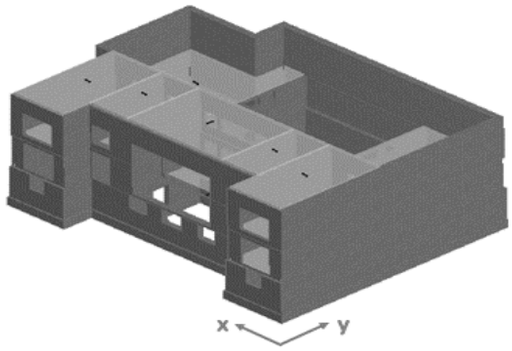

(الف)

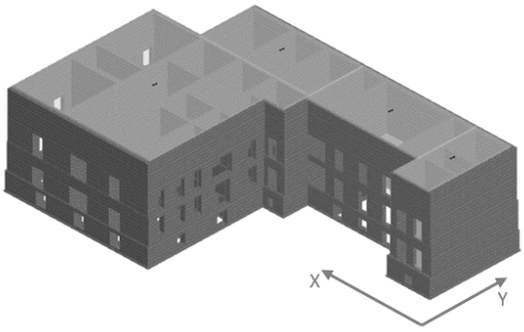

(ب)

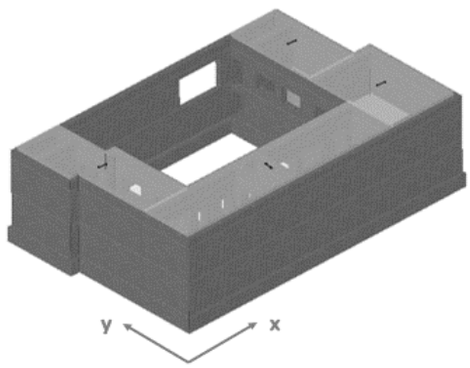

(پ)

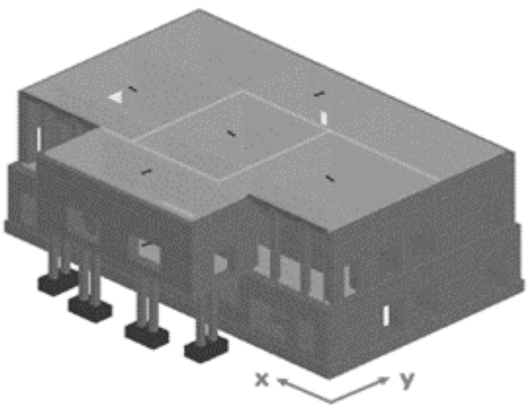

(ت)

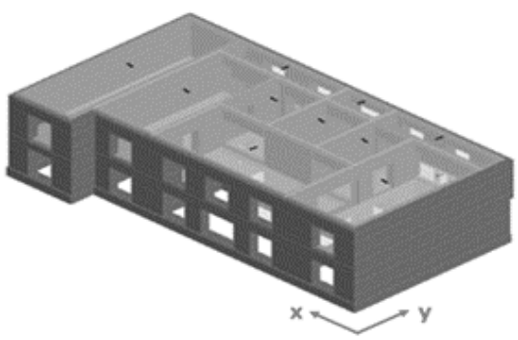

(ث)

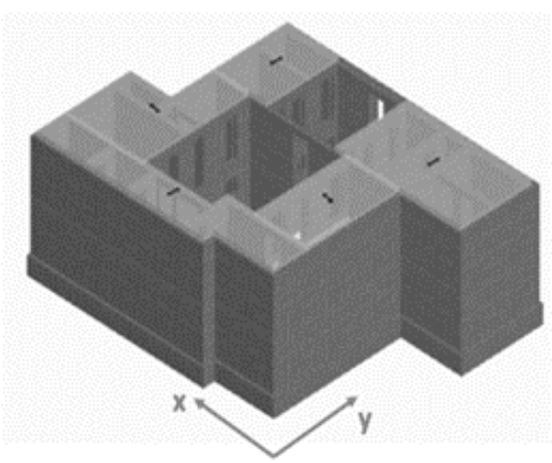

(ج)

شکل ۳: مدل‌سازی سه بعدی خانه‌های مورد مطالعه: الف) بهنام، ب) گنجه‌ای‌زاده، پ) نفیسی، ت) کلانتر، ث) شربت‌اوغلی، ج) علی‌مسیو

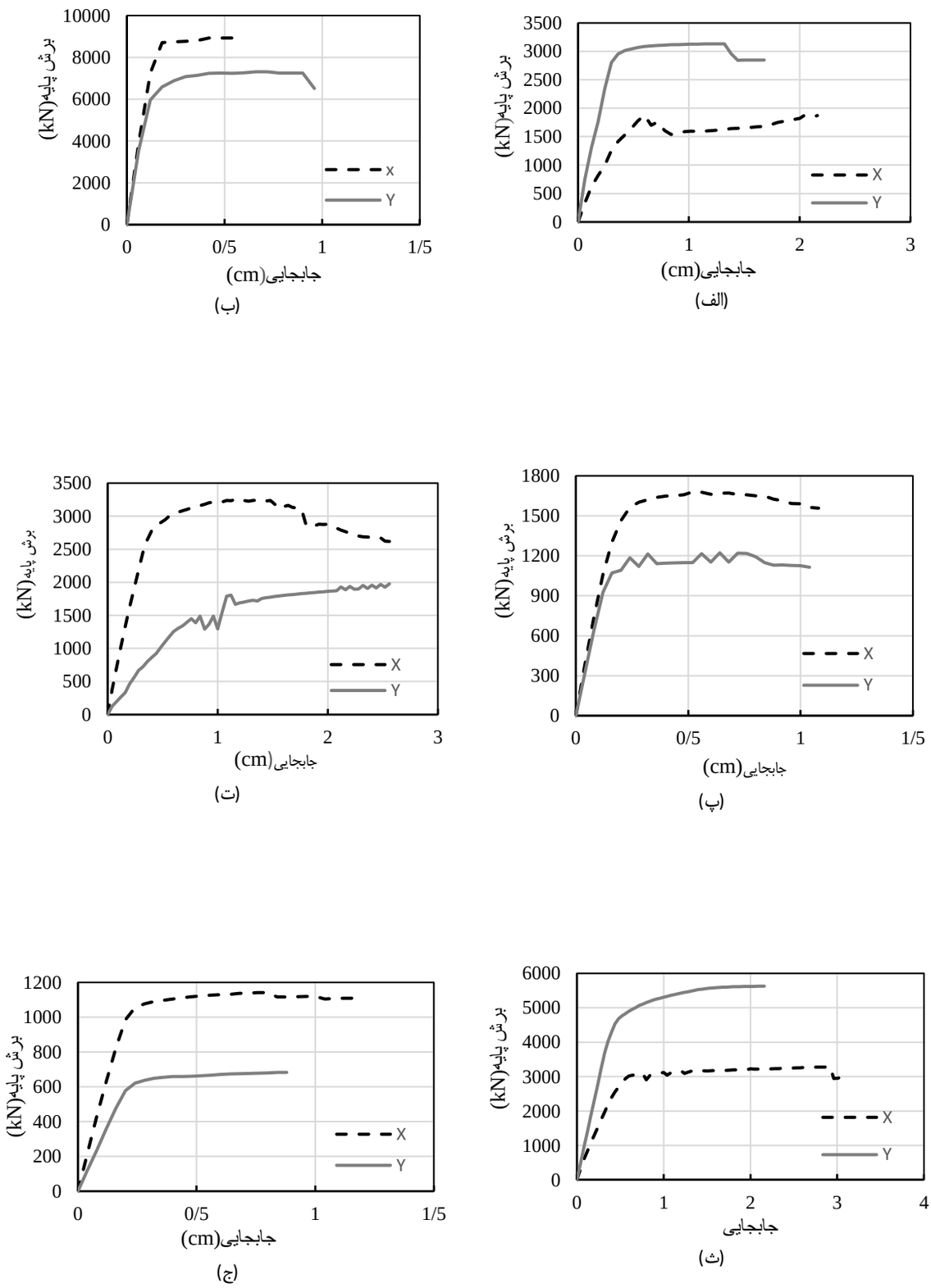

شکل ۴: مقایسه تحلیل غیرخطی خانه‌های مورد مطالعه: الف) بهنام، ب) گنجه‌ای‌زاده، پ) نفیسی، ت) کلانتر، ث) شربت‌اوغلی، ج) علی‌مسیو

۵. نتیجه‌گیری

شش خانه تاریخی مربوط به دوره قاجار به منظور تأکید بر نیاز به توسعه دستورالعمل در مورد ساختمان‌های تاریخی مورد بررسی قرار گرفتند. بناها از بافت تاریخی شهر تبریز انتخاب شدند و بر ا ساس د ستورالعمل‌های ایتالیا مورد تحلیل لرزه‌ای قرار گرفتند. ابتدا شاخص ایمنی لرزه‌ای ساختمان‌ها بر اساس معادلات مکانیکی سطح اول محاسبه شد. نتایج نشان داد که شاخص‌های ایمنی لرزه‌ای تمام بناها کمتر از یک بود و وضعیتی ناایمن داشتند. برای تعیین شاخص ایمنی لرزه‌ای ساختمان‌ها بر اساس سطح سوم تحلیل بارافزون در نرم‌افزار ۳Muri انجام شـــد. بر اســـاس نتایج، خانه‌های مذکور دارای ایمنی لرزه‌ای ناکافی بودند. همچنین مشخص شد که سختی در نمودارهای بارافزون تمام بناها به جز جهت y خانه کلانتر تقریباً تا زمان فروپاشی خطی بوده است. بر اســـاس نتایج نمودار بارافزون، حداکثر مقاومت جانبی در هر دو راســـتای x و y، مربوط به خانه تاریخی گنجه‌ای‌زاده و حداقل مقاومت جانبی در جهات x و y مربوط به خانه تاریخی علی موسیو است؛ بنابراین، مداخلات تقویتی پیشگیرانه، از طریق مطالعات کامل مکانیک خاک، حفاظت و نگهداری مستمر و مداوم و افزایش طول دیوارها در راستای ضعیف باید مورد توجه قرار گیرد. به طور کلی، نتایج سطح سوم شاخص‌های ایمنی لرزه‌ای سطح اول را تأیید می‌کند که سازگاری دو روش را نشان می‌دهد. شاخص های ایمنی سطح سوم بیشتر از شاخص‌های ایمنی سطح اول هستند که نشان‌دهنده محافظه‌کار بودن سطح اول است. با این حال، لازم به تأکید است که این دو روش قابل‌جایگزینی با یکدیگر نیستند.

مشارکت نویسندگان

همه نویسندگان در مفهوم سازی و طراحی مطالعه مشارکت داشتند. مدیریت، گردآوری و تجزیه و تحلیل داده ها توسط سمیه غلامی، فرهاد آخوندی، پائولو بی لورنسو انجام شد. اولین پیش نویس نسخه خطی توسط سمیه غلامی نوشته شده است و همه نویسندگان در مورد آن اظهار نظر کرده اند. همه نویسندگان نسخه نهایی را خوانده و تایید کردند.

فهرست منابع

Muri 10.9.0 - User’s Manual. (S.T.A.2018). ., S. T. A. D. s. [Mobile application software]

Aminifar, E., Akhoundi, F., & Lourenço, P. B. (2022). Verification of Mechanical Properties of Historical Brick Masonry Walls with Masonry Quality Index Method in Iran. International journal of architectural heritage, 1-11. doi:https://doi.org/10.1080/15583058.2022.2089072

Biglari, M., D’Amato, M., & Formisano, A. (2021). Rapid seismic vulnerability and risk assessment of Kermanshah historic mosques. The Open Civil Engineering Journal, 15(1), 135-148. doi:http://dx.doi.org/10.2174/1874149502115010135

Code 360. (2013). the guidelines for improving seismic performance of existing buildings In: Deputy for strategic supervision of technical system affairs.[in persian]

دستورالعمل بهسازی لرزه‌ای ساختمان‌های موجود نشریه شماره ۳۶۰ . (۱۳۹۲). معاونت نظارت راهبردی امور نظام فنی.

DPCM. (2005). Evaluation and reduction of seismic risk of cultural heritage with reference to the Technical Standards for Constructions promulgated by the Ministry of Infrastructure and Transport

DPCM. (2011). Evaluation and reduction of seismic risk of cultural heritage with reference to the Technical Standards for Constructions promulgated by the Ministry of Infrastructure and Transport on 2003 .

IRSt2800. Iranian Code of Practice for Seismic Resistant Design of Buildings,4th Revision. (2015). In Building and Housing Research Center, Tehran, IRAN. [in persian]

آیین‌نامه ۲۸۰۰، آیین‌نامه طراحی ساختمان‌ها در برابر زلزله (ویرایش ٤). (۱۳۹۳). مرکز تحقیقات مسکن و شهرسازی، تهران، ایران.